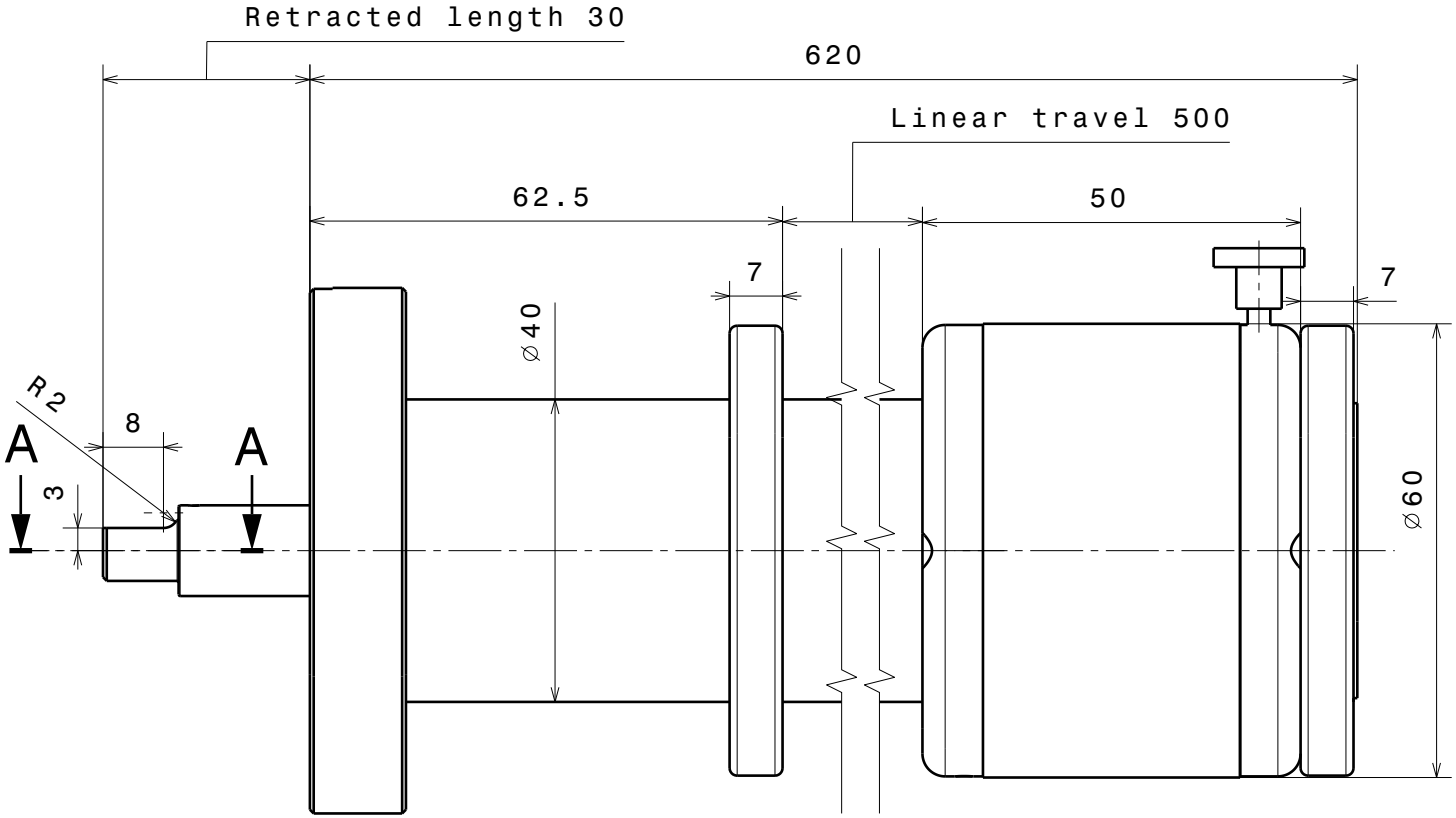

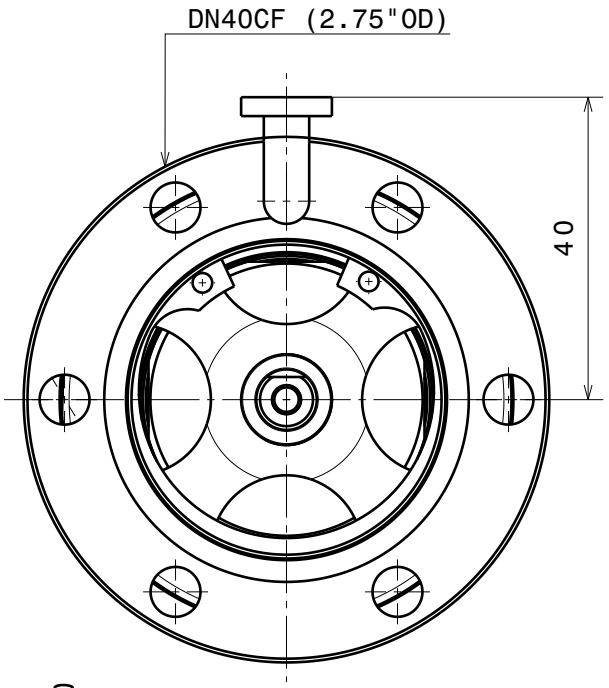

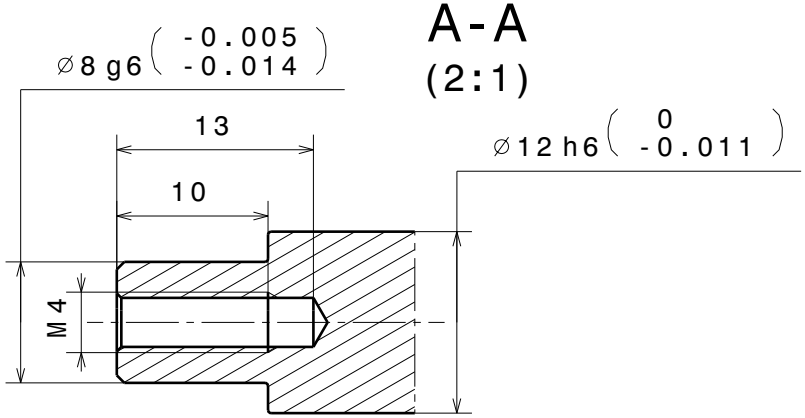

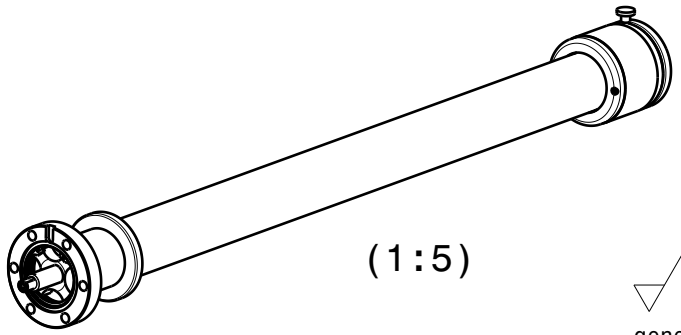

Ra 0.8 (√)

+0.2 / +0.1 -0.1 / -0.2

general tolerances ISO 2768-K

Material: ...

Sample Transporter DN40CF

Single shaft with slide bearings

nominal dimension	over	1	6	30	100	300	1000
	up to	6	30	100	300	1000	2000
tolerance ±		0.05	0.1	0.3	0.5	0.8	1.2

Scale	1:1
Drawn	U. Maier
Date	13.06.2014
changed	05.02.24 LJ
Rev.	B

RM40-0500-0030

sheet 1/1

FERROVAC GMBH
CH-8050 ZURICH

THE INFORMATION CONTAINED IN THIS DRAWING IS THE SOLE PROPERTY OF FERROVAC GMBH. ANY REPRODUCTION IN PART OR AS WHOLE WITHOUT OUR PERMISSION IS PROHIBITED.