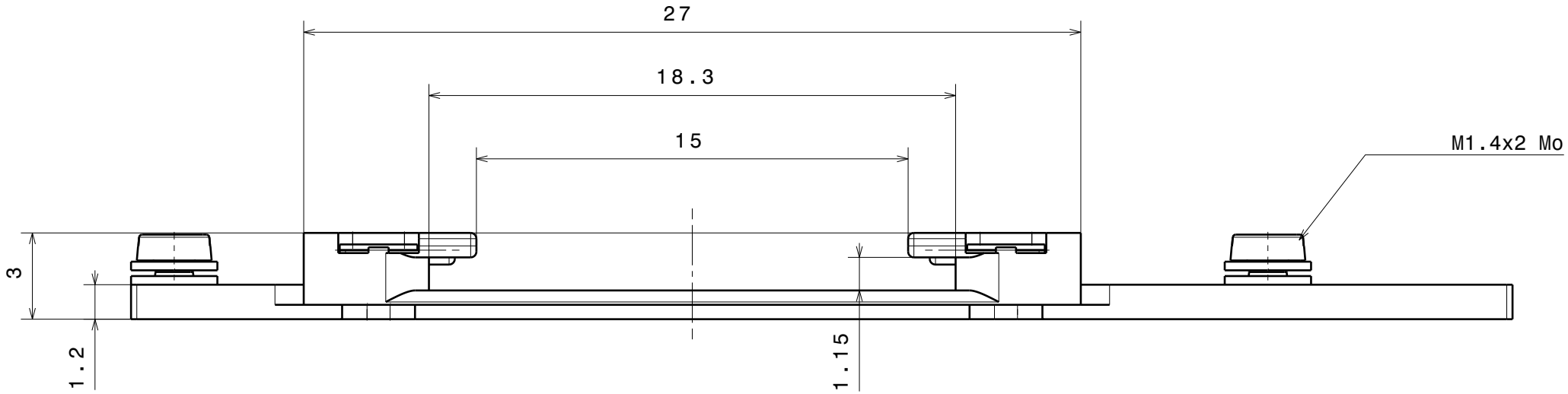

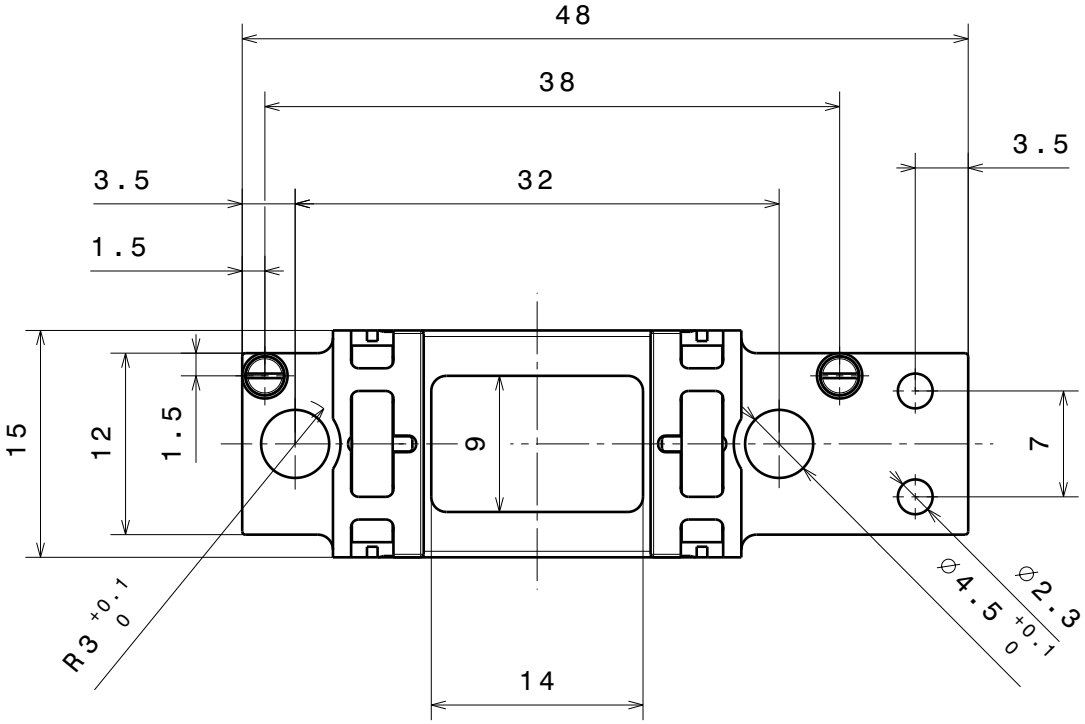

Ra 1.6

+0.2 +0.1

-0.1 -0.2

general tolerances ISO 2768-K

Material: Molybdenum

Receptor for Omicron Plates on VG-Scienta E-Beam Heater

nominal dimension	over	1	6	30	100	300	1000
	up to	6	30	100	300	1000	2000
tolerance ±		0.05	0.1	0.3	0.5	0.8	1.2

Scale	5:1 (2:1)
Drawn	U. Maier
Date	24.11.2010
Revised	3.12.10 UM

Ferrovac GmbH
CH-8050 Zurich

THE INFORMATION CONTAINED IN THIS DRAWING IS THE SOLE PROPERTY OF FERROVAC GMBH. ANY REPRODUCTION IN PART OR AS WHOLE WITHOUT OUR PERMISSION IS PROHIBITED.

RECOMZEBH

sheet 1/1