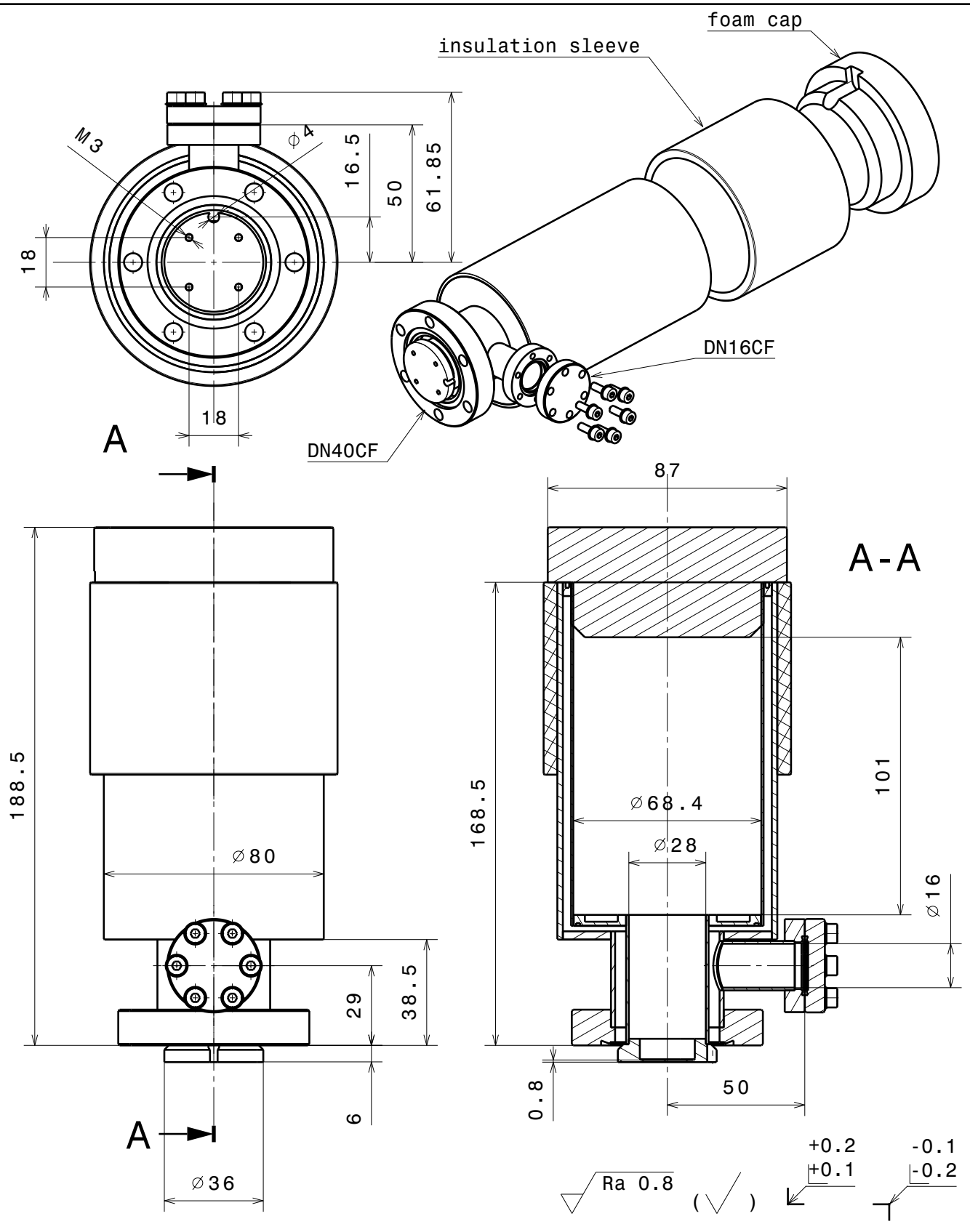

Material: 1.4301 / PU	nominal dimensions	≤30mm	DIN ISO 2768-f-H
		>30mm	DIN ISO 2768-m-K excluding Sym./Runout
	Sym./Runout	>30mm	DIN ISO 2768-H
Liquid Nitrogen Dewar DN40CF	formed part dimensions		DIN ISO 2768-f-H
	Scale		Drawn: U. Maier
	1:2		Date: 07.03.2019
			Changed: .....
			CTDH40
			Rev. C
			A4 sheet 1/1

Ferrovac GmbH
CH-8050 Zurich

THE INFORMATION CONTAINED IN THIS DRAWING IS THE SOLE PROPERTY OF FERROVAC GMBH. ANY REPRODUCTION IN PART OR AS WHOLE WITHOUT OUR PERMISSION IS PROHIBITED.